2. Product Specifications

2-1 Table

Item			Model	AQT24A(B)5RE/AQT24A(B)6RE/SH24TA(B)5/AQT24C5(6)RE				AQT24A(B)5RB/AQT24A(B)6RB/AQT24C5(6)RB			
				Cool		Heat		Cool		Heat	
Power Sourse				220-240V~, 50Hz				220V~, 60Hz			
Perfor-mance	Capacity (ISO/SASO)		kcal/h	BTU	KW	BTU	KW	BTU	KW	BTU	KW
			BTU/h	24,000BTU/h	6.80KW	24,000BTU/h	6.90KW	24,000BTU/h	-	24,000BTU/h	-
	Air circulation (High)		m^2/min	14.0	14.0	14.5	14.5	14.0	-	14.5	-
	Moisture removal (High)		Liters/h	3.0				3.0			
Electrical Rating	Available voltage range		V	198 ~ 264				187 ~ 253			
	Running amperes		A	12.5	12.5	13.0	13.0	13.0	-	13.5	-
	Power input		kw	2.6	2.6	2.7	2.65	2.6	-	2.8	-
	Power factor		%	86.7	86.7	86.5	84.9	90.9	-	94.3	-
	Energy efficiency ratio		BTU/wh	9.2	-	8.9	-	9.2	-	8.6	-
	Compressor locked rotor amperes		A	82				73			
Features	Controls/Temperature control			Microprocessor / I.C Thermistor				Microprocessor / I.C Thermistor			
	Control unit			Wireless remote control				Wireless remote control			
	Timer			24-Hour ON or OFF				24-Hour ON or OFF			
	Fan speed		Indoor/Outdoor	3 Steps and Turbo / 2 Step				3 Steps and Turbo / 2 Step			
	Airflow direction (indoor)		Horizontal	Manual				Manual			
			Vertical	Auto				Auto			
	Comperssor			Reciprocating(Tecumseh)				Reciprocating(Tecumseh)			
	Refrigerant/Amount charged at rating		g	R22 / 1,600g				R22 / 1,600g			
	Refrigerant control			Capillary tube				Capillary tube			
	Operation sound	Indoor Hi/Mi/Lo	dB-A	45 / 43 / 41				45 / 43 / 41			
		Outdoor-Hi	dB-A	58				58			
	Refrigerant tubing connections			Flare type				Flare type			
	Max. allowable tubing length at shippint		m	15				15			
	Refrigerant tube diameter	Narrow tube	(in.)	6.35(1/4")				6.35(1/4")			
		Wide tube	(in.)	15.88(5/8")				15.88(5/8")			
	Refrigerant tube kit/Accessories			Optional / Hanger-plate				Optional / Hanger-plate			
Dimensions & Weight				Indoor unit		Outdoor		Indoor unit		Outdoor	
	Unit dimensions	Height	mm	275		638		275		638	
		Width	mm	1080		880		1080		880	
		Depth	mm	204		310		204		310	
	Package dimensions	Height	mm	372		704		372		704	
		Width	mm	1151		1023		1151		1023	
		Depth	mm	277		413		277		413	
	Weight	Net	kg	13		63		13		63	
		Shipping	kg	16		67		16		67	

Remarks : Rating Conditions are :
Indoor air temperature ISO(50Hz) : 27˚C DB/19.0˚C WB, ISO(60Hz) : 27.0˚C DB/19.5˚C WB
Outdoor air temperature ISO : 35.0˚C DB/24.0˚C WB

Table (cont.)

Item			Model	AQ24A(B)5(6)RBD				AQT18A(B)9RE/AQT18A(B)0RE/AQT18C9(0)RE				AQT18C0REF			
				Cool		Heat		Cool		Heat		Cool		Heat	
Power Sourse				220V~, 60Hz				220-240V~, 50Hz				220-240V~, 50Hz			
Perfor-mance	Capacity (ISO/SASO)		kcal/h	BTU	KW	BTU	KW	BTU	KW	BTU	KW	BTU	KW	BTU	KW
			BTU/h	24,000BTU/h	-	24,000BTU/h	-	18,000BTU/h	5.10KW	20,000BTU/h	5.60KW	18,000BTU/h	5.10KW	20,000BTU/h	5.60KW
	Air circulation (High)		m^2/min	14.0	-	14.5	-	13.0	13.0	13.5	13.5	13.0	13.0	13.5	13.5
	Moisture removal (High)		Liters/h	3.0				2.5				2.5			
Electrical Rating	Available voltage range		V	187 ~ 253				198 ~ 264				198 ~ 264			
	Running amperes		A	10.0	-	11.3	-	9.5	9.5	10.0	10.0	8.3	8.3	9.0	9.0
	Power input		kw	2.4	-	2.6	-	2.00	2.00	2.10	2.10	1.88	1.88	2.02	2.02
	Power factor		%	96.6	-	94.5	-	87.7	87.7	87.5	87.5	98.5	98.5	97.6	97.6
	Energy efficiency ratio		BTU/wh	10.0	-	9.23	-	9.0	-	9.5	-	9.57	-	9.90	-
	Compressor locked rotor amperes		A	51				54				53			
Features	Controls/Temperature control			Microprocessor / I.C Thermistor				Microprocessor / I.C Thermistor				Microprocessor / I.C Thermistor			
	Control unit			Wireless remote control				Wireless remote control				Wireless remote control			
	Timer			24-Hour ON or OFF				24-Hour ON or OFF				24-Hour ON or OFF			
	Fan speed		Indoor/Outdoor	3 Steps and Turbo / 2 Step				3 Steps and Turbo / 2 Step				3 Steps and Turbo / 2 Step			
	Airflow direction (indoor)		Horizontal	Manual				Manual				Manual			
			Vertical	Auto				Auto				Auto			
	Comperssor			Rotary(SAMSUNG)				Reciprocating(Tecumseh)				Rotary(SAMSUNG)			
	Refrigerant/Amount charged at rating		g	R22 / 1,650g				R22 / 1,500g				R22 / 1,500g			
	Refrigerant control			Capillary tube				Capillary tube				Capillary tube			
	Operation sound	Indoor Hi/Mi/Lo	dB-A	48 / 46 / 44				45 / 42 / 39				47 / 44 / 41			
		Outdoor-Hi	dB-A	61				57				58			
	Refrigerant tubing connections			Flare type				Flare type				Flare type			
	Max. allowable tubing length at shippint		m	15				15				15			
	Refrigerant tube diameter	Narrow tube	(in.)	6.35(1/4")				6.35(1/4")				6.35(1/4")			
		Wide tube	(in.)	15.88(5/8")				12.70(1/2")				12.70(1/2")			
	Refrigerant tube kit/Accessories			Optional / Hanger-plate				Optional / Hanger-plate				Optional / Hanger-plate			
Dimensions & Weight				Indoor unit		Outdoor		Indoor unit		Outdoor		Indoor unit		Outdoor	
	Unit dimensions	Height	mm	275		638		275		620		275		620	
		Width	mm	1080		880		1080		787		1080		787	
		Depth	mm	204		310		204		320		204		320	
	Package dimensions	Height	mm	372		704		352		692		352		692	
		Width	mm	1151		1023		1511		909		1511		909	
		Depth	mm	277		413		277		444		277		444	
	Weight	Net	kg	13		64.5		13		58		13		54	
		Shipping	kg	16		68.5		16		62		16		58	

Remarks : Rating Conditions are :
Indoor air temperature ISO(50Hz) : 27˚C DB/19.0˚C WB, ISO(60Hz) : 27.0˚C DB/19.5˚C WB
Outdoor air temperature ISO : 35.0˚C DB/24.0˚C WB

AQT18A(B)9RB/AQT18A(B)0RB/AQT18C9(0)RB				AQ18A(B)9RE/AQ18A(B)0RE/SH18ZA(B)9				AQT24A(B)5(6)RED/SH24TA(B)6D			
Cool		Heat		Cool		Heat		Cool		Heat	
220V~, 60Hz				220-240V~, 50Hz				220-240V~, 50Hz			
BTU	KW	BTU	KW	BTU	KW	BTU	KW	BTU	KW	BTU	KW
18,000BTU/h	-	20,000BTU/h	-	18,000BTU/h	5.10	20,000BTU/h	5.60	24,000BTU/h	6.80KW	24,000BTU/h	6.90KW
13.0	-	13.5	-	13.5	13.5	14.0	14.0	14.0	14.0	14.5	14.5
2.5				2.5				3.0			
187 ~ 253				198 ~ 264				198 ~ 264			
10.0	-	10.5	-	8.3	8.3	8.5	8.5	12.0	12.0	12.5	12.5
2.00	-	2.10	-	1.85	1.80	1.95	1.85	2.55	2.55	2.60	2.60
90.9	-	90.9	-	92.8	90.4	95.6	90.7	92.4	92.4	90.4	90.4
9.0	-	9.5	-	9.7	-	10.2	-	9.4	2.66	9.2	-
52				35				82			
Microprocessor / I.C Thermistor				Microprocessor / I.C Thermostat				Microprocessor / I.C Thermistor			
Wireless remote control				Wireless remote control				Wireless remote control			
24-Hour ON or OFF				24-Hour ON or OFF				24-Hour ON or OFF			
3 Steps and Turbo / 2 Step				3 Steps and Turbo / 2 Step				3 Steps and Turbo / 2 Step			
Manual				Manual				Manual			
Auto				Auto				Auto			
Reciprocating(Tecumseh)				Rotary(SAMSUNG)				Reciprocating(Tecumseh)			
R22 / 1,500g				R22 / 1,550g				R22 / 1,250g			
Capillary tube				Capillary tube				Capillary tube			
45 / 42 / 39				45 / 42 / 39				45 / 43 / 41			
57				55				58			
Flare type				Flare type				Flare type			
15				15				15			
6.35(1/4")				6.35(1/4")				6.35(1/4")			
12.70(1/2")				12.70(1/2")				15.88(5/8")			
Optional / Hanger-plate				Optional / Hanger-plate				Optional / Hanger-plate			
Indoor unit		Outdoor		Indoor unit		Outdoor		Indoor unit		Outdoor	
275		620		275		620		275		638	
1080		787		1080		787		1080		880	
204		320		204		320		204		310	
352		692		352		692		352		704	
1511		909		1151		909		1151		1023	
277		444		277		444		277		413	
13		58		13		46		13		63	
16		62		16		50		16		67	

Table (cont.)

Item			Model	AQ18A(B)9(0)RED/SH18ZA(B)0D				AQ18A(B)9(0)RBD			
				Cool		Heat		Cool		Heat	
Power Sourse				220-240V~, 50Hz				220V~, 60Hz			
Perfor-mance	Capacity (ISO/SASO)		kcal/h	BTU	KW	BTU	KW	BTU	KW	BTU	KW
			BTU/h	18,000BTU/h	5.10	20,000BTU/h	5.60	18,000BTU/h	-	20,000BTU/h	-
	Air circulation (High)		m^2/min	13.5	13.5	14.0	14.0	13.5	13.5	14.0	14.0
	Moisture removal (High)		Liters/h	2.5				2.5			
Electrical Rating	Available voltage range		V	198 ~ 264				187~253			
	Running amperes		A	8.1	8.1	7.9	7.9	8.3	-	8.3	-
	Power input		kw	1.76	1.76	1.70	1.70	1.77	-	1.80	-
	Power factor		%	94.5	94.5	93.6	93.6	96.9	-	98.6	-
	Energy efficiency ratio		BTU/wh	10.2	2.90	11.8	-	10.17	-	10.57	-
	Compressor locked rotor amperes		A	35				35			
Features	Controls/Temperature control			Microprocessor / I.C Thermistor				Microprocessor / I.C Thermistor			
	Control unit			Wireless remote control				Wireless remote control			
	Timer			24-Hour ON or OFF				24-Hour ON or OFF			
	Fan speed		Indoor/Outdoor	3 Steps and Turbo / 2 Step				3 Steps and Turbo / 2 Step			
	Airflow direction (indoor)		Horizontal	Manual				Manual			
			Vertical	Auto				Auto			
	Comperssor			Rotary(SAMSUNG)				Rotary(SAMSUNG)			
	Refrigerant/Amount charged at rating		g	R22 / 1,150g				R22 / 1,210g			
	Refrigerant control			Capillary tube				Capillary tube			
	Operation sound	Indoor Hi/Mi/Lo	dB-A	46 / 44 / 42				46 / 44 / 42			
		Outdoor-Hi	dB-A	55				58			
	Refrigerant tubing connections			Flare type				Flare type			
	Max. allowable tubing length at shippint		m	15				15			
	Refrigerant tube diameter	Narrow tube	(in.)	6.35(1/4")				6.35(1/4")			
		Wide tube	(in.)	12.70(1/2")				12.70(1/2")			
	Refrigerant tube kit/Accessories			Optional / Hanger-plate				Optional / Hanger-plate			
Dimensions & Weight				Indoor unit		Outdoor		Indoor unit		Outdoor	
	Unit dimensions	Height	mm	275		620		275		620	
		Width	mm	1080		787		1080		787	
		Depth	mm	204		320		204		320	
	Package dimensions	Height	mm	352		692		352		692	
		Width	mm	1151		909		1151		909	
		Depth	mm	277		444		277		444	
	Weight	Net	kg	13		46		13		46	
		Shipping	kg	16		50		16		50	

Remarks : Rating Conditions are :
Indoor air temperature ISO(50Hz) : 27˚C DB/19.0˚C WB, ISO(60Hz) : 27.0˚C DB/19.5˚C WB
Outdoor air temperature ISO : 35.0˚C DB/24.0˚C WB

2-2 Major Component specifications

■ Indoor unit

Model				AQT24A(B)5RE/AQT24A(B)6RE/SH24TA(B)5/AQT24C5(6)RE	AQT24A(B)5RB/AQT24A(B)6RB/AQT24C5(6)RB
PCB	Part No.			PD-SH30ZC-00	PD-SH30ZC-00
	Controls			Microprocessor	Microprocessor
	Control circuit fuse			250V, 3.15A	250V, 3.15A
Fan & Fan Motor	Type			Cross-Flow	Cross-Flow
	Dia. and length mm			ø95/L = 842	ø95/L = 842
	Fan motor model			IC-9430SKC7A	IC-9430SKC7A
	Pols,rpm(at 240V)			4P, 1350 RPM	4P, 1350 RPM
	Normal out W			40W	40W
	Coil resistance(Ambient temp.20˚C) Ω			MAIN : 137Ω	MAIN : 137Ω
				SUB : 132Ω	SUB : 132Ω
	Safety devices	Type		17AM034A5	17AM034A5
		Operating temp.	Open ˚C	135 ± 5°C	135 ± 5°C
	Run capacitor	µF x VAC		2µF x 450VAC	2µF x 450VAC
S-Motor	Type				
	Model			MSFCC20A03	MSFCC20A03
	Rating			DC 12V	DC 12V
	Coil resistance (Ambient temp. 25˚C) Ω			530Ω	530Ω
Heat Exch.	Coil			AL-FIN/Copper tube	AL-FIN/Copper tube
	Rows x Steps			2 x 15	2 x 15
	Fin pitch mm			1.2	1.2
	Face area m^2			0.315	0.315

■ Outdoor unit

Model				UQT24A(B)5RE/UQT24A(B)6RE/SH24TA(B)5X/UQT24C5(6)RE	UQT24A(B)5RB/UQT24A(B)6RBUQT24C5(6)RB
Comp-ressor	Type			Reciprocating	Reciprocating
	Compressor model			AWG5532EXC	AWG5528EXN
	Normal output W			2660	2830
	Comperssor oil kind			WITCO LP200 OR EQUIVALENT	WITCO LP200 OR EQUIVALENT
	Comperssor oil cc			INITIAL : 1125 REFILL : 1066	INITIAL : 1125 REFILL : 1066
	Oil Specific gravity			0.92	0.92
	Coil resistance(Ambient temp.25˚C) Ω			Start winding : 2.49	Start winding : 1.94
				Run winding : 0.81	Run winding : 0.88
	Safety devices	Type		15HM2415-148	15HM2415-148
		Overloal relay		Internal Line Break	Internal Line Break
		Operating temp.	Open ˚C	120	120
			Close ˚C	69	69
		Operating amp(Ambient temp.)		73.0 AT 2-10 SECOND	73.0 AT 2-10 SECOND
	Run capacitor µF x VAC			45MF x 370VAC	35MF x 370VAC
Fan & Fan	Type			Propeller	Propeller
	Dia. and length mm			ø460	ø460
	Fan motor model			OSME-906SRC	OSM-906SRC
	Pols, rpm(at240V)			6P, 850/400 RPM	6P, 850/400 RPM
	Normal output W			70W	70W
	Coil resistance(Ambient temp.20˚C) Ω			MAIN : 55Ω	MAIN : 55Ω
				SUB : 60Ω	SUB : 65Ω
	Safety devices	Type		17AM037A5	17AM037A5
		Operating temp.	Open ˚C	150±5°C	150±5°C
			Close ˚C		
	Run capacitor µF x VAC			4µF x 450VAC	4µF x 450VAC
Heat Exch.	Coil			AL-FIN / Copper tube	AL-FIN / Copper tube
	Rows x Steps			2 x 24	2 x 24
	Fin pitch mm			1.7	1.7
	Face area m^2			0.5376	0.5376

2-2 Major Component specifications

■ Indoor unit

Model				AQ24A(B)5(6)RBD	AQT18A(B)9RE/AQT18A(B)02RE	AQT18C0REF
PCB	Part No.			PD-SH30ZC-02	PD-SH30ZC-02	PD-SH30ZC-02
	Controls			Microprocessor	Microprocessor	Microprocessor
	Control circuit fuse			250V, 3.15A	250V, 3.15A	250V, 3.15A
Fan & Fan Motor	Type			Cross-Flow	Cross-Flow	Cross-Flow
	Dia. and length mm			ø95/L = 842	ø95/L = 842	ø95/L = 842
	Fan motor model			IC-9430SKC7A	IC-9430SKC7A	IC-9430SKC7A
	Pols,rpm(at 240V)			4P, 1350 RPM	4P, 1350 RPM	4P, 1350 RPM
	Normal out W			40W	40W	40W
	Coil resistance(Ambient temp.20˚C) Ω			MAIN : 137Ω	MAIN : 137Ω	MAIN : 137Ω
				SUB : 132Ω	SUB : 132Ω	SUB : 132Ω
	Safety devices	Type		17AM034A5	17AM034A5	17AM034A5
		Operating temp.	Open ˚C	135 ± 5˚C	135 ± 5˚C	135 ± 5˚C
	Run capacitor		µF x VAC	2µF x 450VAC	2µF x 450VAC	2µF x 450VAC
S-Motor	Type					
	Model			MSFCC20A03	MSFCC20A03	MSFCC20A03
	Rating			DC 12V	DC 12V	DC 12V
	Coil resistance (Ambient temp. 25˚C) Ω			530Ω	530Ω	530Ω
Heat Exch.	Coil			AL-FIN/Copper tube	AL-FIN/Copper tube	AL-FIN/Copper tube
	Rows x Steps			2 x 15	2 x 15	2 x 15
	Fin pitch mm			1.2	1.5	1.5
	Face area m^2			0.315	0.315	0.315

■ Outdoor unit

Model				UQ24A(B)5(6)RBD	UQT18A9RE/UQT18A0RE	UQT18C0REF
Comp-ressor	Type			Rotary	Reciprocating	Rotary
	Compressor model			55A240IUZEM	AWG5524EXC	55A200JT1EM
	Normal output W			2220	2030	1920
	Comperssor oil kind			SUNISO-4GSDT	WITCO LP200 OR EQUIVALENT	SUNISO-4GSDT
	Comperssor oil cc			800	INITIAL : 1125 REFILL : 1066	650
	Oil Specific gravity			0.92	0.92	0.92
	Coil resistance(Ambient temp.25˚C) Ω			Common to main : 1.84	Common to main : 2.98	Common to main : 1.14
				-	Common to sub: 1.42	Common to sub: 4.13
	Safety devices	Type		3HM605-41	15HM2416-148	3HM532-41
		Overloal relay		Internal Line Break	Internal Line Break	Internal Line Break
		Operating temp.	Open ˚C	135	120	135
			Close ˚C	74	69	74
		Operating amp(Ambient temp.)		95˚F(35˚C)	73.0 AT 2-10 SECOND	95˚F(35˚C)
	Run capacitor µF x VAC			40µF x 450VAC	35µF x 450VAC	45µFx450VAC
Fan & Fan	Type			Propeller	Propeller	Propeller
	Dia. and length mm			ø460	ø405	ø405
	Fan motor model			OSM-906SRC	ASS030AVEB	ASS030AVEB
	Pols, rpm(at240V)			6P, 850/400 RPM	4P, 950/500 RPM	4P, 950/500 RPM
	Normal output W			70W	35W	35W
	Coil resistance(Ambient temp.20˚C) Ω			MAIN : 55Ω	MAIN : 180Ω	MAIN : 180Ω
				SUB : 65Ω	SUB : 200Ω	SUB : 200Ω
	Safety devices	Type		17AM037A5	17AM034A5	17AM034A5
		Operating temp.	Open ˚C	150±5˚C	135±5˚C	135±5˚C
			Close ˚C	-	-	-
	Run capacitor µF x VAC			4µF x 450VAC	2.5µF x 450VAC	3.0µF x 450VAC
Heat Exch.	Coil			AL-FIN / Copper tube	AL-FIN / Copper tube	AL-FIN / Copper tube
	Rows x Steps			2 x 24	2 x 24	2 x 24
	Fin pitch mm			1.7	1.7	1.7
	Face area m^2			0.5376	0.504	0.504

AQT18A(B)9RB/AQT18A(B)0RB/AQT18C9(0)RB	AQ18A(B)9RE/AQ18A(B)0RE/SH18ZA(B)9	AQ18A(B)9(0)RBD
PD-SH30ZC-00	PD-SH30ZC-00	PD-SH30ZC-00
Microprocessor	Microprocessor	Microprocessor
250V, 3.15A	250V, 3.15A	250V, 3.15A
Cross-Flow	Cross-Flow	Cross-Flow
ø95/L = 842	ø95/L = 842	ø95/L = 842
IC-9430SKC7A	IC-94309KC7A	IC-94309KC7A
4P, 1350 RPM	4P, 1350 RPM	4P, 1350 RPM
40W	40W	40W
MAIN : 137Ω	MAIN : 137Ω	MAIN : 137Ω
SUB : 132Ω	SUB : 132Ω	SUB : 132Ω
17AM034A5	17AM034A5	17AM034A5
135 ± 5°C	135 ± 5°C	135 ± 5°C
2μF x 450VAC	2.0μF x 450VAC	2.0μF x 450VAC
MSFCC20A03	MSFCC20A03	MSFCC20A03
DC 12V	DC 12V	DC 12V
530Ω	530Ω	530Ω
AL-FIN/Copper tube	AL-FIN/Copper tube	AL-FIN/Copper tube
2 x 15	2 x 15	2 x 15
1.5	1.5	1.5
0.315	0.315	0.315

UQT18AB(9)RB/UQT18A(B)0RB/UQT18C9(0)RB	UQ18A(B)9RE/UQ18A(B)0RE/SH18ZA(B)9X	UQ18A(B)9(0)RBD
Reciprocating	Rotary	Rotary
AWG5520EXN	48B180JV1EH	48D190IU1EH
2070	1885	1769
WITCO LP200 OR EQUIVALENT	SUNISO-4GSD-T	SUNISO-4GSD
INITIAL : 1125 REFILL : 1066	600	600
0.92	0.92	0.92
Common to main : 2.72	Common to main : 1.84	Common to main : 1.84
Common to sub : 1.32	Common to sub : -	-
15HM2311-148	RAC12016-9622	RAC12016-9622
Internal Line Break	External Line Break	External Line Break
120	165˚C	165˚C
69	74˚C	74˚C
73.0 AT 2-10 SECOND	120°C : 10.7A 130°C : 9.4A	95˚F(35˚C)
25MF x 370VAC	40μF x 450VAC	40μF x 450VAC
Propeller	Propeller	Propeller
ø405	ø405	ø405
ASS030ZTEC	ASS030AVEB	ASS030ZTEC
4P, 950/500 RPM	4P, 950/500 RPM	4P, 950/500 RPM
35W	35W	35W
MAIN : 160Ω	MAIN : 180Ω	MAIN : 180Ω
SUB : 170Ω	SUB : 200Ω	SUB : 200Ω
17AM034A5	17AM037A5	17AM037A5
135±5˚C	135±5˚C	135±5˚C
2.5μF x 450VAC	2.5μF x 450VAC	2.5μF x 450VAC
AL-FIN / Copper tube	AL-FIN / Copper tube	AL-FIN / Copper tube
2 x 24	2 x 24	2 x 28
1.7	1.7	1.5
0.504	0.504	0.534

Major Component specifications (cont.)

■ Indoor unit

Model				AQT24A(B)5(6)RED/SH24TA(B)6D	AQ18A(B)9(0)RE(B)D/SH18ZA(B)0D
PCB	Part No.			PD-SH30ZC-00	PD-SH30ZC-00
	Controls			Microprocessor	Microprocessor
	Control circuit fuse			250V, 3.15A	250V, 3.15A
Fan & Fan Motor	Type			Cross-Flow	Cross-Flow
	Dia. and length mm			ø95/L = 842	ø95/L = 842
	Fan motor model			IC-9430SKC7A	IC-94309KC7A
	Pols,rpm(at 240V)			4P, 1350 RPM	4P, 1350 RPM
	Normal out W			40W	40W
	Coil resistance(Ambient temp.20˚C) Ω			MAIN : 137Ω	MAIN : 137Ω
				SUB : 132Ω	SUB : 132Ω
	Safety devices	Type		17AM034A5	17AM034A5
		Operating temp.	Open ˚C	135 ± 5°C	135 ± 5°C
	Run capacitor	µF x VAC		2µF x 450VAC	2.0µF x 450VAC
S-Motor	Type				
	Model			MSFCC20A03	MSFCC20A03
	Rating			DC 12V	DC 12V
	Coil resistance (Ambient temp. 25˚C) Ω			530Ω	530Ω
Heat Exch.	Coil			AL-FIN/Copper tube	AL-FIN/Copper tube
	Rows x Steps			2 x 15	2 x 15
	Fin pitch mm			1.2	1.5
	Face area m^2			0.315	0.315

■ Outdoor unit

Model				UQT24A(B)5(6)RED/SH24TA(B)6DX	UQ18A(B)9(0)RED/SH18ZA(B)0DX
Comp-ressor	Type			Reciprocating	Rotary
	Compressor model			AWG5532EXC	48B180JV1EH
	Normal output W			2660	1885
	Comperssor oil kind			WITCO LP200 OR EQUIVALENT	SUNSO-4GSD-T
	Comperssor oil cc			INITIAL : 1125 REFILL : 1066	600
	Oil Specific gravity			0.92	0.92
	Coil resistance(Ambient temp.25˚C) Ω			Start winding : 2.49	Common to main : 1.84
				Run winding : 0.81	Common to sub : -
	Safety devices	Type		15HM2415-148	RAC12016-9622
		Overloal relay		Internal Line Break	External Line Break
		Operating temp.	Open ˚C	120	165°C
			Close ˚C	69	74°C
		Operating amp(Ambient temp.)		73.0 AT 2-10 SECOND	120°C : 10.7A 130°C : 9.4A
	Run capacitor µF x VAC			45MF x 370VAC	40µF x 450VAC
Fan & Fan	Type			Propeller	Propeller
	Dia. and length mm			ø460	ø405
	Fan motor model			OSME-906SRC	ASS030AVEB
	Pols, rpm(at240V)			6P, 850/400 RPM	4P, 950/500 RPM
	Normal output W			70W	35W
	Coil resistance(Ambient temp.20˚C) Ω			MAIN : 55Ω	MAIN : 180Ω
				SUB : 60Ω	SUB : 200Ω
	Safety devices	Type		17AM037A5	17AM037A5
		Operating temp.	Open ˚C	150±5°C	135±5°C
			Close ˚C		
	Run capacitor µF x VAC			4µF x 450VAC	2.5µF x 450VAC
Heat Exch.	Coil			AL-FIN / Copper tube	AL-FIN / Copper tube
	Rows x Steps			2 x 28	2 x 28
	Fin pitch mm			1.5	1.5
	Face area m^2			0.543	0.504

2-3 Dimensions

2-3-1 Indoor Unit

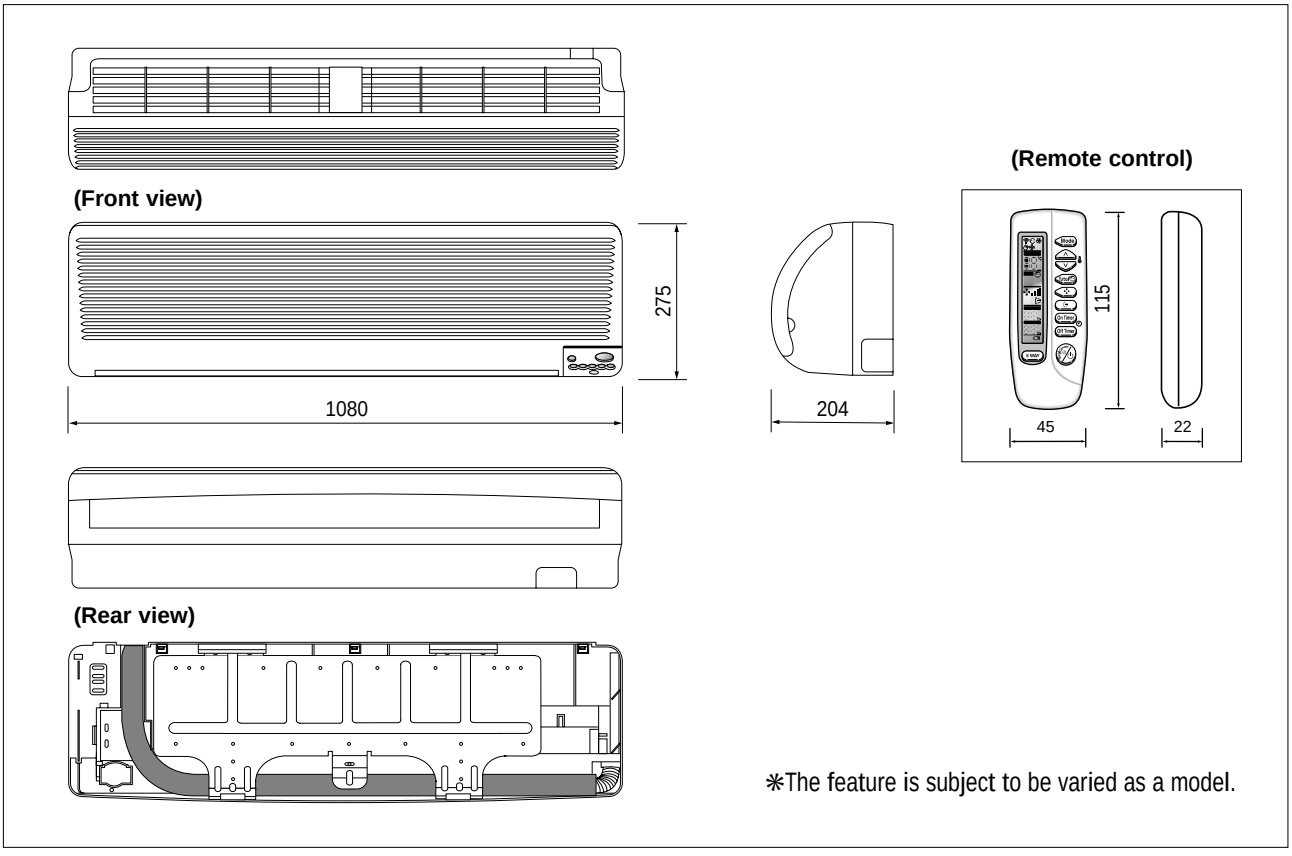

2-3-2 Outdoor Unit

2-3-2(a) 24K BTU

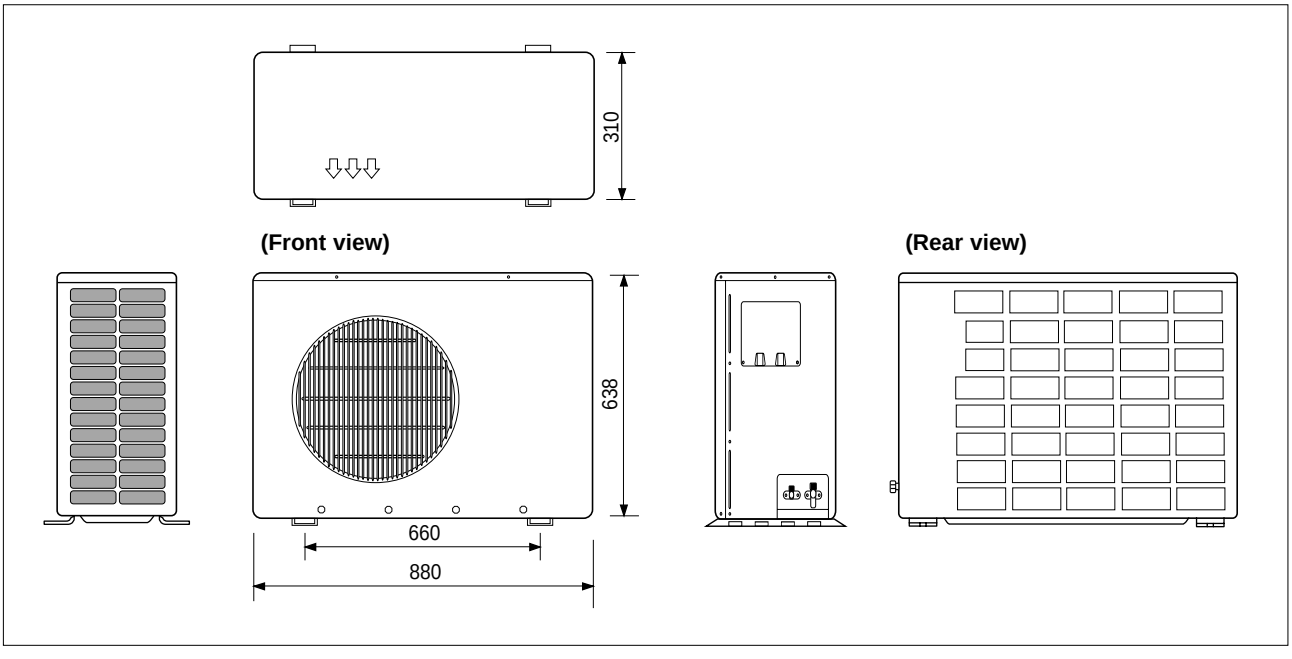

2-3-3(b) 18K BTU

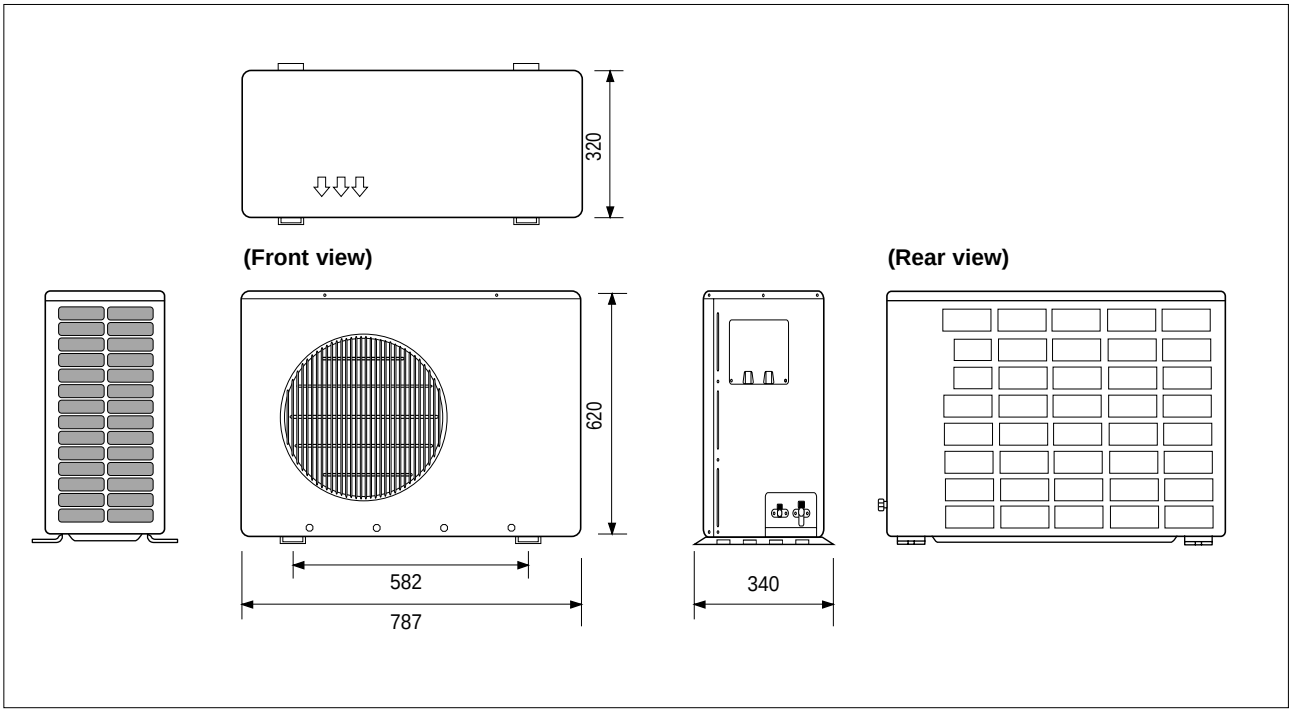

2-4 Pressure Graph

■ 24K BTU

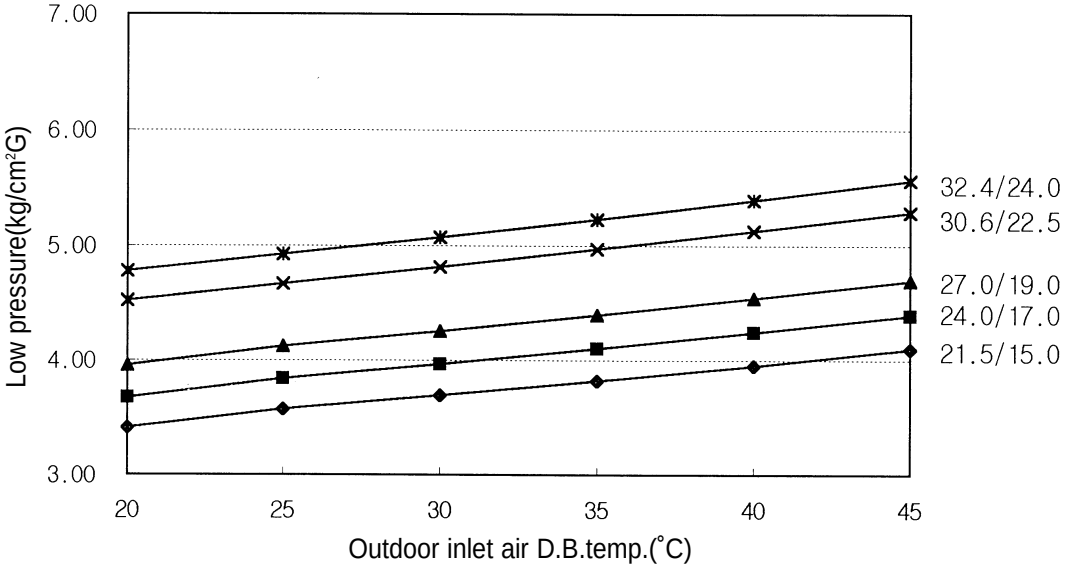

■ 18 BTU

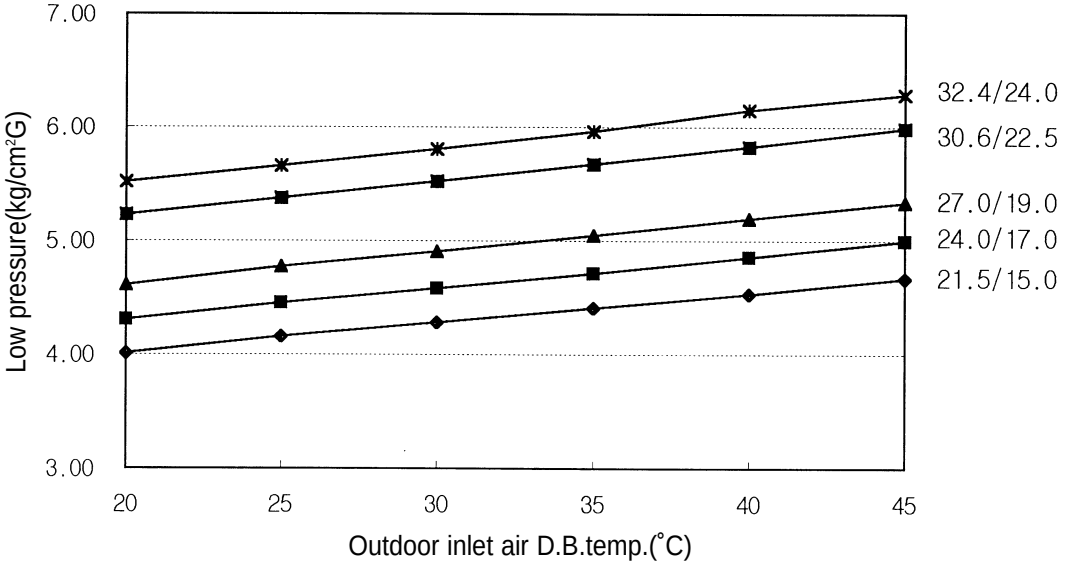

MEMO